CITROEN BERLINGO
4x4 DANGEL

INSTRUCTIONS FOR USE AND MAINTENANCE
(In addition to the basic manual)

V36 BERLINGO 4x4 – REF : 5572G – 07/2013

Dear Customer,

thank you for selecting a vehicle with the 4-wheel drive system designed an manufacturer by Automobiles DANGEL.

To ensure that you benefit fully your DANGEL vehicle, this manual includes all features of the 4-wheel drive systems.
Please read this manual completely before using the vehicle for the first time.
This manual contains important information, details and advice.
That will assist you in using your DANGEL 4-wheel drive system.

You will find information about maintenance of your vehicle's 4-wheel drive system at the end of this booklet.

Automobiles DANGEL wishes you pleasant reading and safe driving.

WARNING

Your vehicle's 4-wheel drive system appreciably improves its traction; thus it can navigate roads where, under some circumstances, a 2-wheel drive version will not be able to travel.

For your safety and the longevity of your vehicle, when road conditions become treacherous, please change your driving style accordingly (see pages of this manual about limits and operating recommendations)

This manual is given to you in **addition to the basic manual** of your vehicle and only deals with features of the 4-wheel drive system by Automobiles DANGEL.
For any other information, please refer to the basic vehicle manual.

We draw your attention...
Your vehicle takes some of the equipments described in this document based on the level of finishing, the version available in the country.

TABLE OF CONTENTS:

OPERATING INSTRUCTIONS……..... 4 to 11
Warnings 4
Driving 4
Weights and payloads 9
We fit 9
The tyres 10
Washing the vehicle 11
In case of an incident 11

VEHICLE IDENTIFICATION…….…… 12

HOW TO OPERATE A 4X4 DANGEL..……..... 13 to 25
Architecture of the system 13
Operating principle 14
Limited slip rear axle option 16
Lockable rear axle option 17
Lower forward gear option 21
Frequently asked questions 22

WARRANTY……... 25
Automobiles DANGEL Warranty
Guarantee principle of bodywork experts

MAINTENANCE……..... 26 to 29
Who should I contact
Mandatory maintenance operations

CHECK……..... 30 to 34

OPERATING ADVICE:

WARNING

The 4-wheel system designed and manufactured by Automobiles DANGEL gives you additional traction, however without giving you the capability to clear excessive obstacles.
Therefore, its enhanced traction renders it suitable for **all-road** operation but **not all-terrain.**

Non compliance with the recommendations given in this manual may damage your vehicle and render the guarantee null and void.

Vehicle's tool set:
In addition to the tool kit, the vehicle has a torx key above the front left light in the engine compartment, to dismount the group of solenoid valves in order to access the fuse box engine. It includes a 75 mm block of wood to be placed under the jack. In passenger cars, this wedge is placed in the floor cases at the foot of rear passengers.

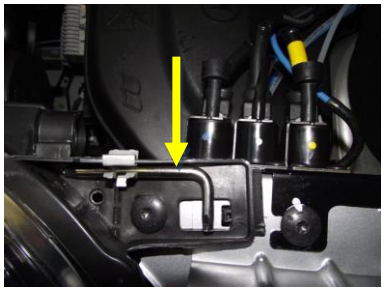

DRIVING

- **How to operate the 4-wheel mode?**

Your vehicle is fitted with an automatic hydraulic coupler. Its job is to transfer a part of engine torque to the rear axle in case of loss of front axle traction. This transfer is **fully automatic** and does not require **you to take any action.**

Note: *During tight parking manoeuvres (in 1st gear and reverse) near steering locks, the 4-wheel drive system slightly brakes the vehicle. This **phenomenon is completely normal** and results from the different rotation speeds between the front and rear axles.*

Your vehicle is fitted with:

- An automatic hydraulic coupler:
  The visco-coupler.
- As an option, a limited slip rear axle.
- As an option, a lockable rear axle.
- As an option, an ultra-low forward gear.

- **Driving on all-roads?**

The all-road performance of this vehicle category (gross vehicle weight “G.V.W” of up to 2.2 tons) is influenced by:

- The transported weight, its distribution stowage.
- The available traction.
- The type of ground.
- Wear and type of tyres.

<u>When driving on unpaved roads or when traction becomes precarious:</u>

☺ Drive gently and without jerks for a smooth drive.
☺ Moderate your speed to calmly negotiate a turning or a descent.
☺ Anticipate braking actions by taking into account that stopping distances willbe significantly longer.

Driving with a trailer?

<u>Under all-roads conditions, when you pull a trailer, you must take into account that:</u>

☺ The trailer is not necessarily suited for all-road usage.
☺ Selection of parking place is important for re-starting easily.
☺ The weight of the trailer and its load will influence the behaviour and the trajectory of your vehicle. Try to anticipate.
☺ Check the coupling torque of the hitch assembly at 1000 km →see coupling instructions.

- **Fording?**

Fording is limited in depth to the radius of the wheels (310 mm) and must remain an exception.

- **How to cross an obstacle?**

To cross an obstacle (low ditches, step, etc.) we advice you to:

☺ First of all avoid taking it front on.
☺ As far as possible, approach it at an angle.
☺ One wheel after the other.
☺ and release the accelerator before the obstacle.

- **Vehicle equipped with stop and start?**

In order not to disturb the user when driving offroad at low speed, we advise to neutralize the Stop & Start system as written in the instructions manual for original manufacturer.

- **Climbing up a slope?**

<u>On a slope:</u>

☺ Do not take a U-turn.
☺ Always stay in the line of the steepest slope.
☺ Traction, load and its distribution influence the maximum value of the slope that can be negotiated.
☺ Always use the engine brake in descent.

WARNING

Under all circumstances, be ready to change strategy based on your driving situation, and anticipate difficulties, both for your own safety and that of other road users.

Useful values for all-roads versions L1-L2:

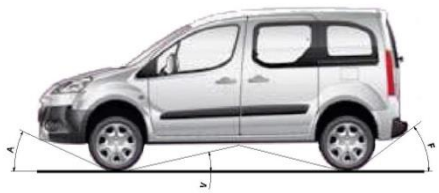

	Clearance values when unloaded		
Version	Front angle (A)	Central angle (V)	Rear (F)
L 1	27.7°	24,8° (12.4° x 2)	42.7°
L 2	27.7°	24.8° (12.4° x 2)	29.3°

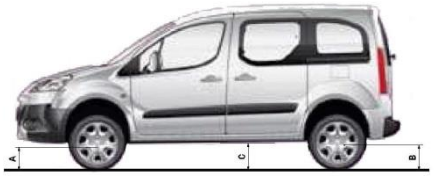

Ground clearance unloaded (*)	
Under engine skip plate (A)	200 mm
Under rear axle (B)	215 mm
Under chassis (C)	275 mm

* : Theoretical values with 195x65R15 wheels given for information only and may vary with the equipment

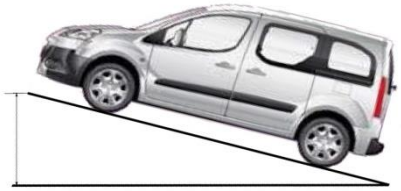

Max. slope (B) 1.6 HDI FAP 92 / 90cv VP / VU		
Unloaded	With load of 300 Kg	Under max. load
73% / 83%	57% / 63%	52% / 50%

B: Theoretical values given for information only and corresponding to the maximum torque rating

- **Safety !**

  - ➢ Wheels antiblocking system (ABS).

    - Your vehicle is fitted with an ABS system **which electronic control is specific to your vehicle**. The purpose of this incomparable safety feature is to prevent the wheels from locking on low traction surfaces and to maintain control of the vehicle's trajectory especially in case of emergency braking.

ABS in case of poor traction:

On regular roads there is no difference between the anti-locking action of a 4-wheel and 2-wheel version. However, a vehicle with a 4-wheel drive can negotiate terrains that a 2-wheel version, even though improved, would not be able to travel on.
Please note that, on grounds with poor traction (snow, etc.) or on bumpy roads, the anti-locking action can actually increase the stopping distances.

<u>Note:</u> Regulations do not authorise deactivating the anti-locking mechanism temporarily, therefore it is totally prohibited to add a device for disengaging it on demand.

  - ➢ Electronic stability program (**ESP**).

The electronic control of the ESP is specific to the vehicle and includes the following systems that are identical to those of the base vehicle. <u>Please refer to the manufacturer's manual for any further information:</u>

- Wheels antiblocking system (ABS) and Electronic Brakeforce Distribution (**REF**).

The warning light together with a sound signal and a message indicates a poor running of the system that can lead to a loss of control when braking.

The lighting of this indicator, coupled with the **STOP** indicator, together with a sound signal and a message indicates a poor running of the **REF** that can lead to a loss of control when braking.

In both cases, **the system gets inactive**, please rapidly contact a network dealer or a qualified workshop.

Note : when wheels get changed (tyres and rims), please take care that they are homologated for your vehicle. When the ABS is running it can show through light vibrations on the brake pedal.

- The emergency brake assist (**AFU**).
- The Acceleration Slip Regulation (**ASR**).
- The dynamic stability control (**CDS**).

The **CDS** system is automatically activated at the engine starting. In case of loss of adherence the system switches on and is indicated by the light blinking on the dash board.

In special conditions (mud, snow, soft soil), it might be necessary to neutralize the system by pushing the button in order to get the wheels slip and to have adherence again.

Note: Reactivation of the system can be made manually or automatically from 50 km/h on.

Dynamic stability control **CDS**

The system offers additional safety on top of the 4x4 in normal use but it must not encourage the driver to take risks or drive at too high speeds over the limit of physics' laws.

Weights and payloads

For more information, refer to your registration certificate.

WARNING

The **payload** values take into account the weight of the DANGEL equipment (approx. 90 Kg depending on the version).
The 4-wheel drive system improves your vehicle's traction but overloading the vehicle is not authorised.
Towing speed is according to the EC 97/27 Directive for the commercial vehicle (V.U., N1) and EC 92/91 for the personal vehicle (V.P., M1) or EU n° 458/2011 regulation.

In the case of a tractor vehicle it is forbidden to overtake the 80 kmph speed in commercial vehicle and 100 kmph in personal vehicle. Please take into consideration the authorized loads that can be towed as well as the speed limits in accordance with the local regulation of every country.

To know the permitted vertical load on the tow bar, refer to the installation instructions of the tow bar (inside the vehicle).
The values of G.C.W.R* and towing charges indicated are for a maximum altitude of 1000 meters, maximum trailer weight must be reduced by 10% in increments of 1000 meters further.

High outside temperatures can cause lower performance of the vehicle. To protect the engine when the outside temperature is above 37 ° C, limit the towed weight.

Note that the loading space and the internal dimensions of the vehicle remain unchanged by the equipment 4X4 (see the instructions manual of the base vehicle for more information).

* G.C.W.R.: Gross Combination Weight Rating

WE FIT:

Engines		Shapes
PC / LCV 1.6 HDI FAP **Power** 75 CV (55 Kw) **Torque** 185 N.m		
PC 1.6 HDI FAP **Power** 92 CV (68 Kw) **Torque** 230 N.m	**LCV 1.6 HDI FAP** **Power** 90 CV (66 Kw) **Torque** 215 N.m	
PC 1.6 HDI FAP **Power** 112 CV (82 Kw) **Torque** 240 N.m		

The tyres

- **What would be the tyre pressure?**

The tyre is the element that connects your vehicle to the ground and it is therefore important to check its pressure regularly.
Tyres with correct pressure will ensure:

☺ A good grip of the road
☺ Moderate fuel consumption
☺ Protection from wear

Reminder: *The tyre pressure is checked when they are cold.*

Note:
- The M+S tyres (option) with different characteristics from those of the base vehicle are adapted to off-road situations and road grip changes. It is recommended to consider this feature in normal conditions of use of the vehicle on the road.
- The tire pressure value is indicated in the instructions manual of the base vehicle or on the sticker on the driver door panel.

- ## Geometry of the front axle?

0° ±0°09', vehicle in running order.

- ## Geometry of the rear axle?

Value unchanged.

Note: *For adjusting the alignment, it is not necessary to place the vehicle in reference plane.*

WARNING

The tyres must be of the **same brand,** of the **same type**, and have the **same degree of wear** in the front and at the back.
Ensure that the front and rear **wheels are regularly swapped around without crossing them** depending on their wear.
Tyres wear has a direct impact on the traction of a vehicle manoeuvring in **precarious conditions** (snow, mud…).
For such uses do not hesitate to **replace the tyres earlier,** before they start showing signs of wear.
Do not hesitate to customise the tyres to your use.

Washing the vehicle

After your vehicle has been used under severe conditions (mud, snow…), we advise you to wash it:

☺ Taking off the wheels of the vehicle optimises washing.
☺ Pressurised wash is more effective.
☺ Washing under the body frame make it more effective.
☺ Check that the engine skip plates are not clogged, and remove if required in order to prevent blocking of moving elements.

If you are using a high pressure hose please maintain proper distance in order to:

☺ Protect the painted surfaces.
☺ Protect the fragile mechanical items (joints, hoses …).

In case of an incident?

Contact a repair shop certified by the manufacturer while informing them that your vehicle is fitted with a DANGEL 4-wheel drive system (hand this manual to them if required). For easier identification, you may want to give them the vehicle's conversion number (see page 12).

WARNING

Like most of the 4-wheel drive vehicles, **never haul by lifting the front or the back** (it can destroy the transmission).

The Vehicle must be hauled with 4 wheels on the ground (or loaded on a deck).

VEHICLE IDENTIFICATION:

The vehicle was fitted by Automobiles DANGEL. In order to identify it, a body-builder plate is placed in the engine compartment on the right hand side. (See photo below).

In utility vehicles:

AUTOMOBILES DANGEL
Stage 2
XXXXXXXXXXXXXXXXX
XXXX
XXXX
1-XXXX
2-XXXX

Automobiles DANGEL
N° TRANSFORMATION
36xxxxx

In passenger vehicles:

AUTOMOBILES DANGEL
e2*XXXX/XXX*XXXX
Stage 2
XXXXXXXXXXXXXXXXX
XXXX
XXXX
1-XXXX
2-XXXX

Automobiles DANGEL
N° TRANSFORMATION
36xxxxx

This identification is necessary for after sales service and for the guarantee.

OPERATION OF THE AUTOMOBILES DANGEL 4X4 EQUIPMENT

Architecture of the system

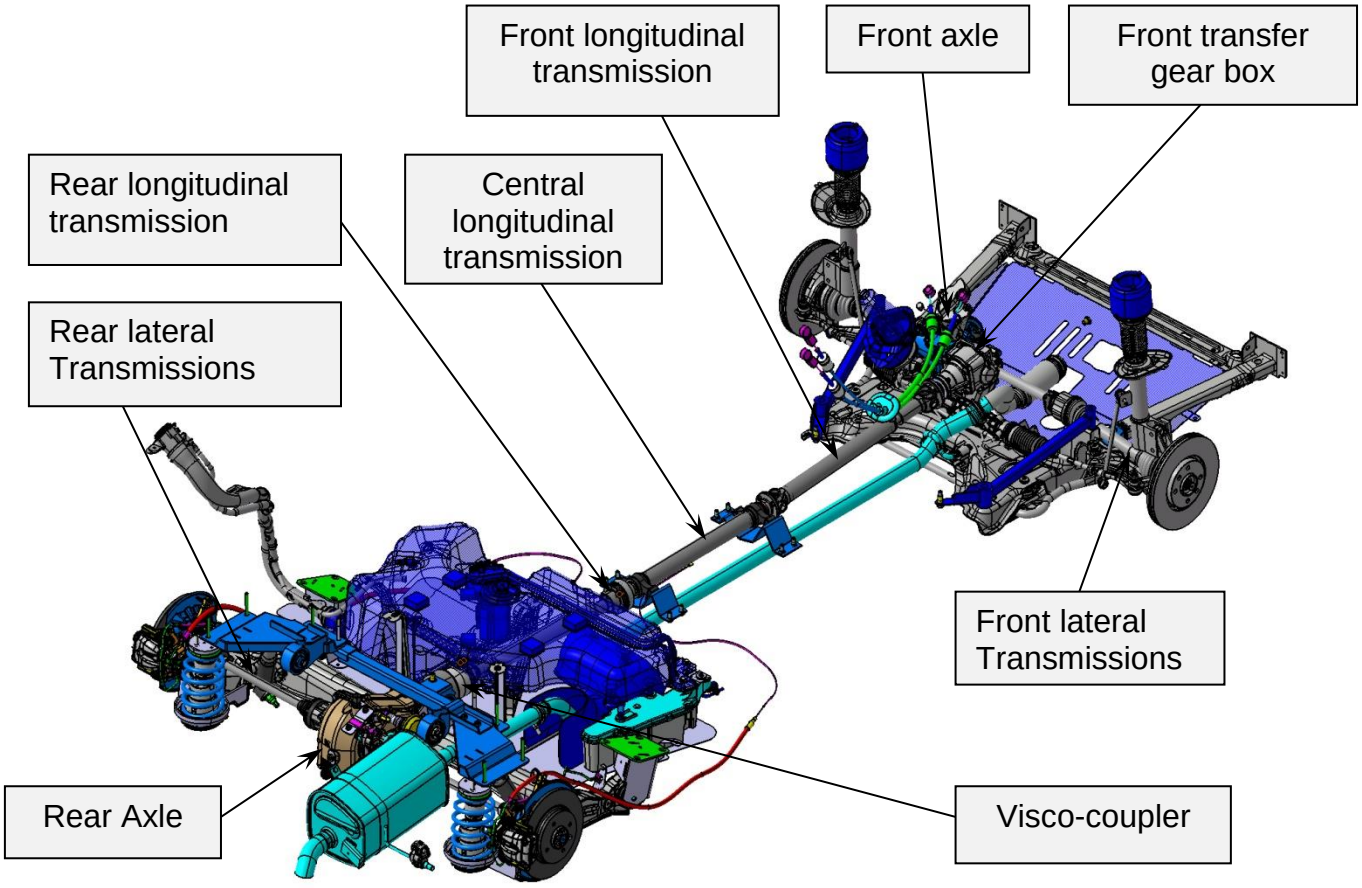

Characteristics of the 4x4 conversion:

- 4x4 transmission with automatic transfer of torque through hydraulic coupler.
- Total ground clearance of 200 mm unloaded and in running order (may vary depending on the model).
- Gear ratios unchanged
- Original tyres
- Weight of the equipment: approximately 90 kg (varies based on version)

The system uses two running positions:

a **2WD** (eco) position where traction comes from the two front wheels only (green lights on).

a **4WD** (auto) position for optimum traction from all four wheels depending on the road surface (green + yellow lights on).

<u>Note:</u>

Since the jaw clutching system is mechanical, the light display does not necessarily represent the mechanical position of the jaw clutch (see transition mode in the chapter on sound and light signals).
Never shift from 2WD to 4WD position when the front wheels are slipping.

« eco 2WD » lights.

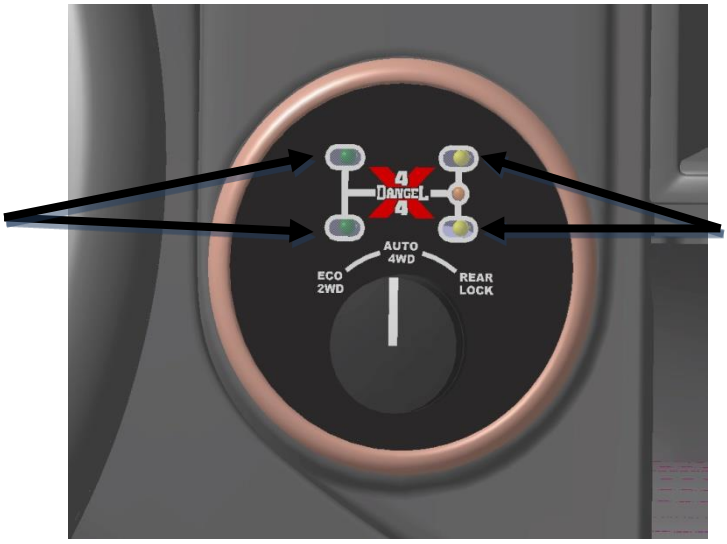

“auto 4WD”lights in addition to the “eco” lights.

Operating principle of 2WD (eco)

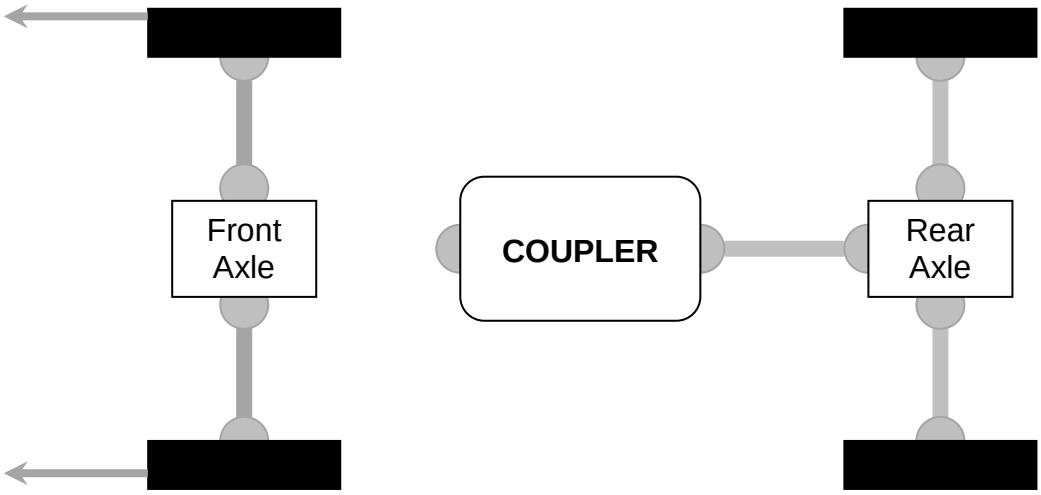

Operating principle of 4WD (auto)

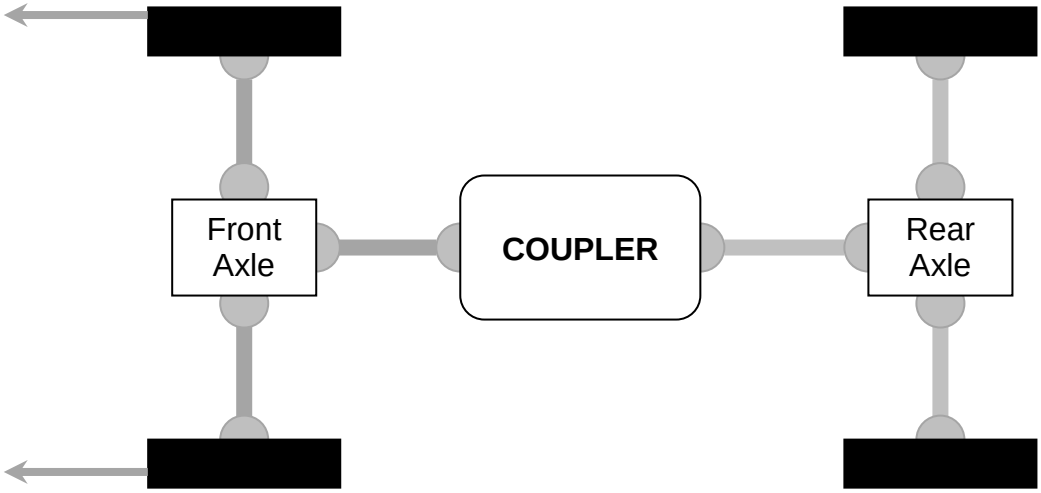

NORMAL RUNNING

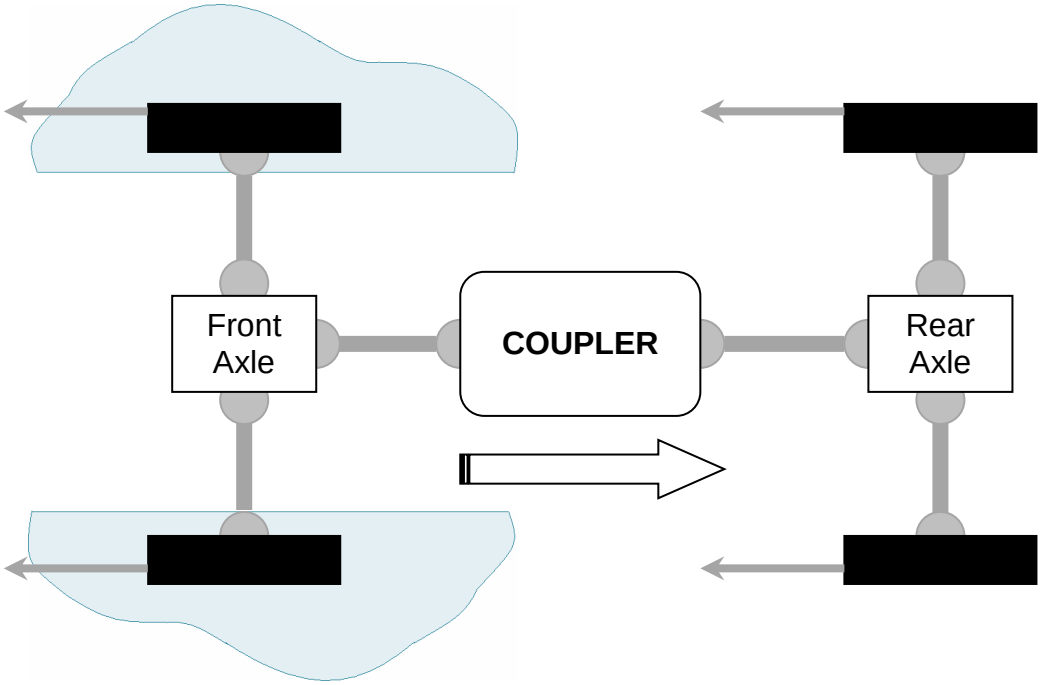

LOSS OF FRONT AXLE GRIP

Automobiles DANGEL's 4-wheel drive system operates based on **automatic** and **optimal distribution** of the **engine torque.** The **coupler** is the **heart of the system**.

Depending on the traction of the front wheels, the coupler automatically distributes the engine torque to the rear wheels which provides **additional traction** to the vehicle.

The Acceleration Slip Regulation (ASR) on vehicles equipped with the Electronic stability program (ESP) optimizes the additional driving power so that the wheels do not slip by braking the 4 driving wheels and acting on the engine torque.

Operating principle of the limited slip rear axle (option)

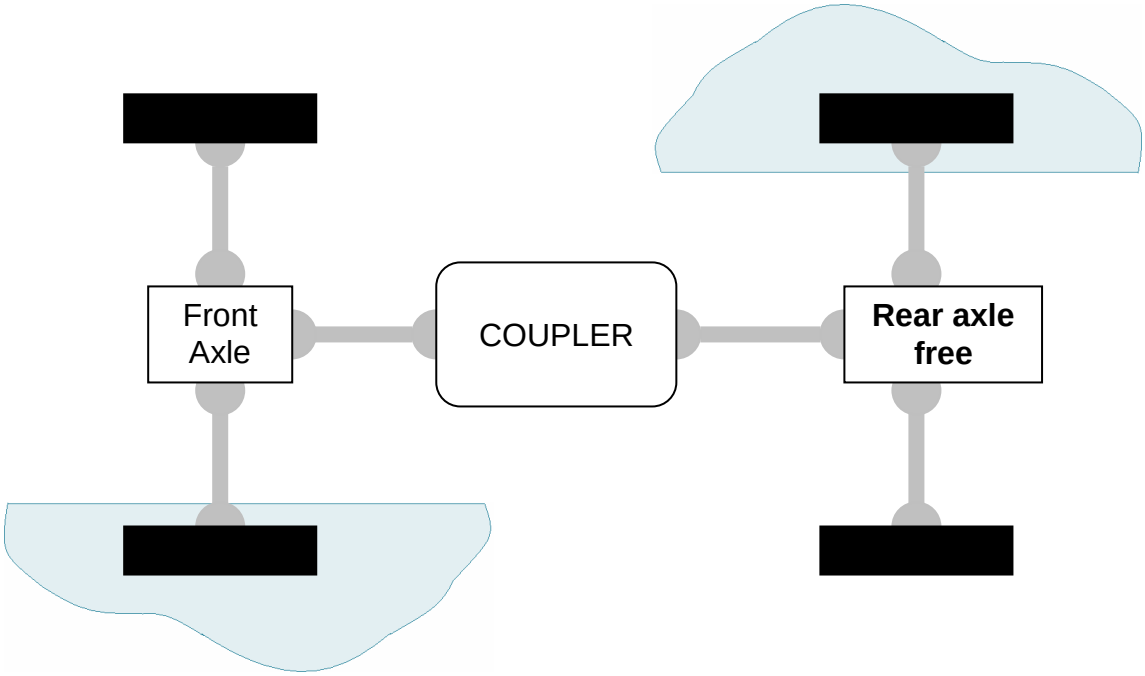

LOSS OF GRIP OF A REAR WHEEL AND OF A FRONT WHEEL;
FREE REAR AXLE ➔ FORWARD MOVEMENT IS IMPOSSIBLE

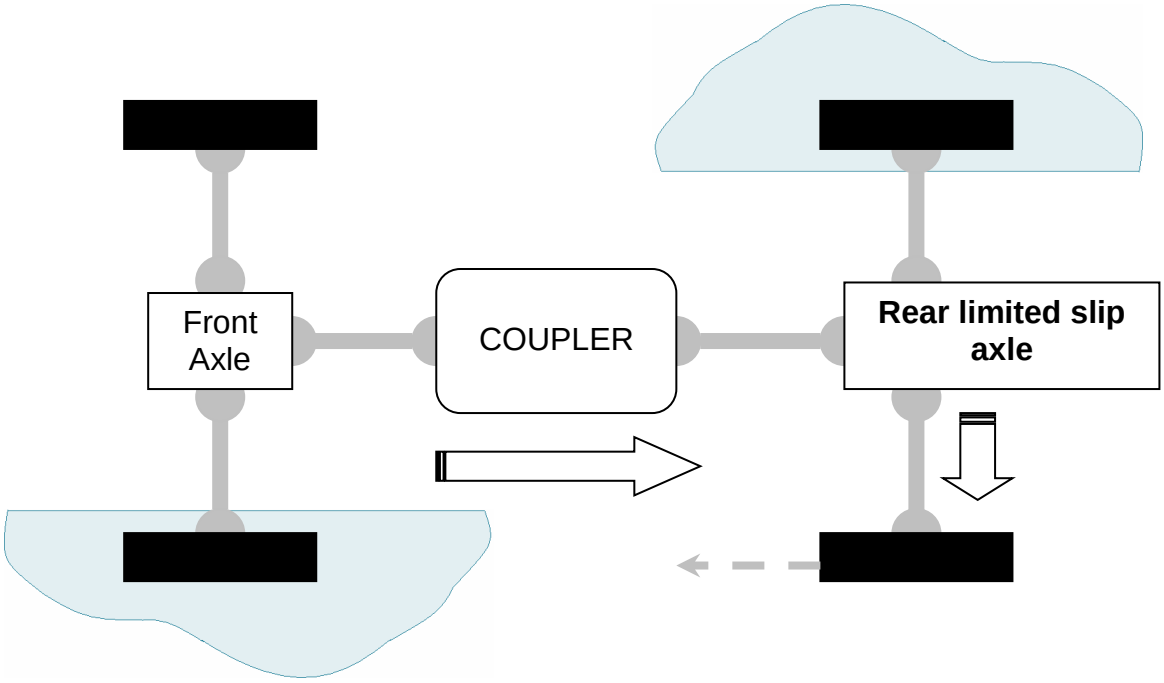

LOSS OF GRIP OF A REAR WHEEL AND OF A FRONT WHEEL;
REAR LTD SLIP AXLE ➔ FORWARD MOVEMENT IS POSSIBLE
Limited to 50 N.m of torque at the wheel.

Operating principle of the lockable rear axle (option)

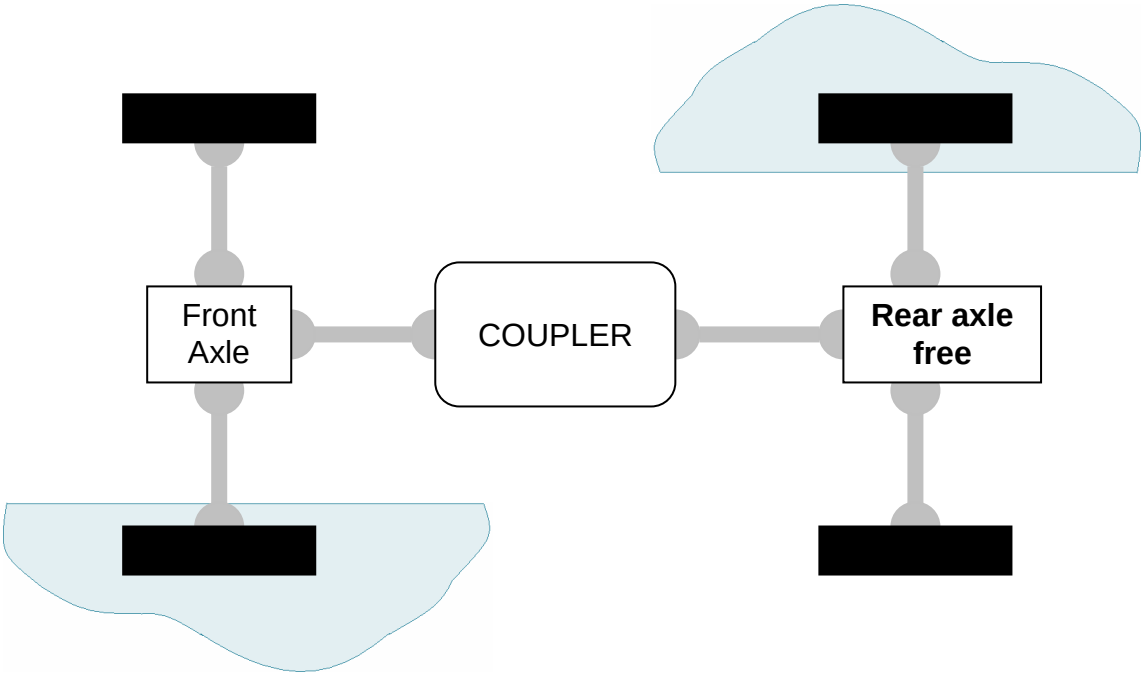

LOSS OF GRIP OF A REAR WHEEL AND OF A FRONT WHEEL;
REAR AXLE FREE ➔ FORWARD MOVEMENT IS IMPOSSIBLE

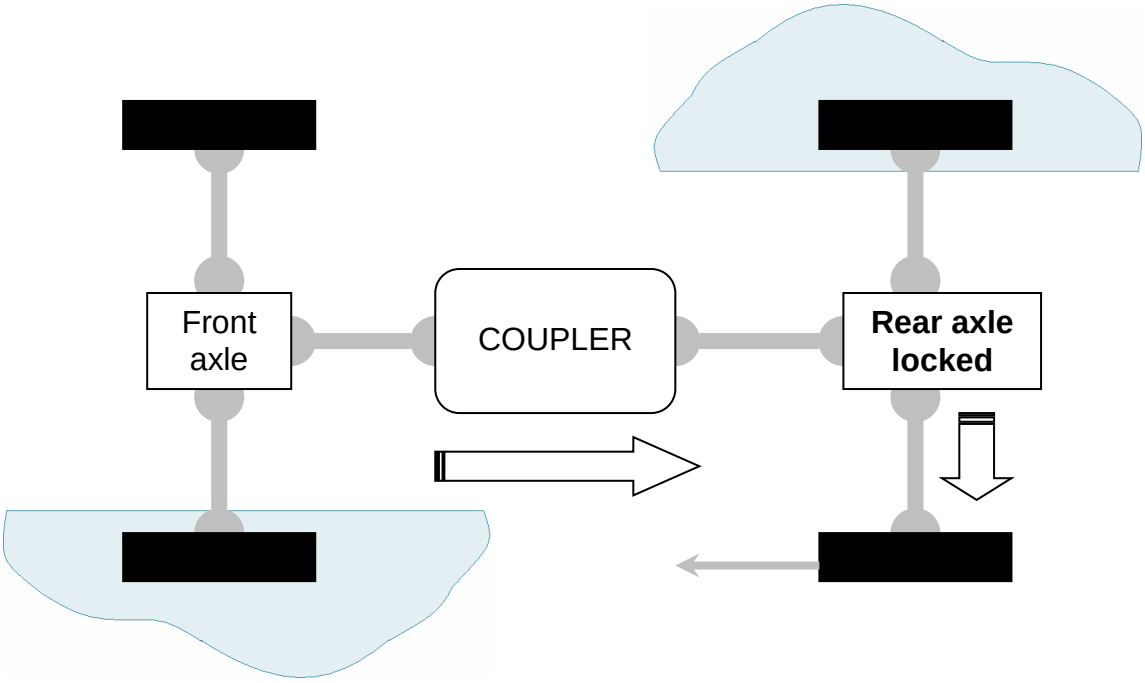

LOSS OF GRIP OF A REAR WHEEL AND OF A FRONT WHEEL;
REAR AXLE LOCKED ➔ FORWARD MOVEMENT IS POSSIBLE

In **free position**, the rear DANGEL axle distributes the torque between the right wheel and the left wheel. Moreover the differential enables the rear right wheel and the rear left wheel to turn at different speeds. In curves this ensures **safe road handling**, and **preserves the drivetrain and the tyres.**

In **locked position**, the rear DANGEL axle drives both rear wheels at exactly the same speed. This helps the vehicle move on the most difficult roads: uneven hills, steep and bumpy climbs, etc.

For further details on using the lockable differential rear axle, refer below.

- **IMPORTANT**

The locking of the rear differential must be used under exceptional circumstances.

- Rear differential locking must be activated only on grounds with poor traction.
- <u>Do not use the locking mechanism on ground with good traction, especially on turning.</u>
- Do not engage the locking mechanism when the wheels are slipping.
- Engage slowly at the 1st restart.
- Unlock the differential after crossing the difficult area.

Using the rear differential locking (option)

The rear axle with lockable differential increases the all-road capability of your vehicle.

Highly bumpy or slippery slopes and uneven climbs areas can be managed when the rear differential is locked.
We advise you to lock the rear differential before negotiating the difficult areas.

On a slope with varying traction, drive slowly in order to avoid jerks in the transmission. Under these conditions, and depending on the ground type, it can happen that all the rear wheel drive power is transferred to a single rear wheel, the one that has maintained traction.
Do not make U-turns on a slope and always stay pointed up or down the line of the steepest slope.

<u>NOTE:</u>

For your safety and to ensure that your vehicle gives you lasting service, do not over use its crossing capabilities, <u>it is not an off road vehicle.</u>

- **How to lock the rear differential**

When stopped or at slow speed, turn the nob 1/4 turn clock-wise to lock the rear differential. The nob will automatically return to the centre.

After rotating the nob, the axle indicator will start blinking (+ quick intermittent sound signal) until the axle is actualy locked and then stays lit to confirm that the locking is complete. A buzzer sounds when the differential is actually locked (slow intermittent sound signal).

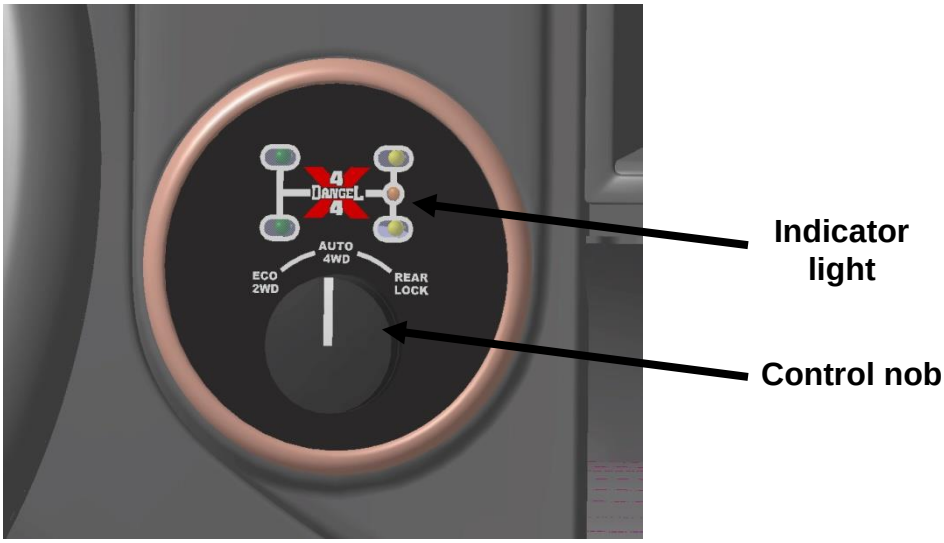

For your safety, the system prevents locking the differential at speeds over approximately 30 km/h.

- **To unlock the rear differential**

Turn the nob again 1/4 turn clock-wise to unlock the rear differential.

Note:
- Unlocking is automatic when the speed exceeds 30 km/h, and after turning off the engine.
- When stopped, unlocking may not be instantaneous. It is signalled by blinking light. Should this happen, just drive for a few meters to unlock the differential.

- **Sound and light signals**

Under normal operation:
- The orange indicator stays lit continuously to confirm the locking.
- A buzzer is heard when the differential is actually locked (slow intermittent sound signal).

In transition mode: (locking asked but not mechanically engaged).
- The orange indicator blinks and the sound signal is intermittent and rapid.

WARNING

For your safety and to preserve your vehicle: Since the locking system is a mechanical system, the transition phase may be longer or shorter.
If the system remains in transition mode, please contact your certified repairer.

The fuse of the locking electrical circuit is placed under the gear lever bellow.

Fuse: 10 amperes.

Location of the fuse of the locking electrical circuit

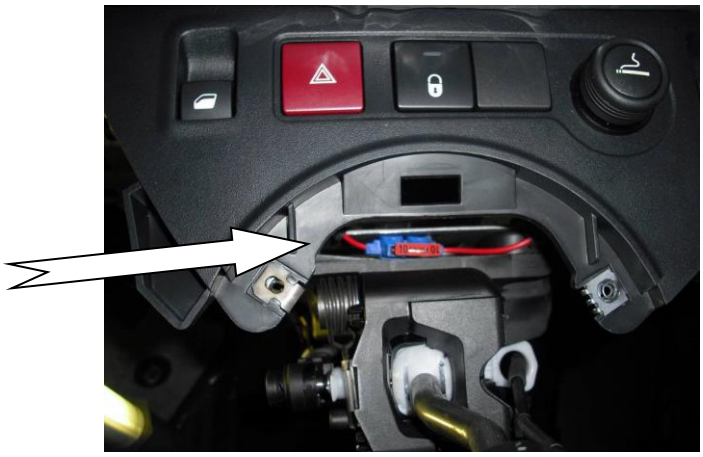

Note:
The electrical connection is made on the cigarette lighter power supply. In case the rear locking does not work, check the cigarette lighter's fuse by referring to the manufacturer's maintenance manual.

Using the lower forward gear (option)

The lower forward gear is an additional speed, available using the gear shifter.
Note that this gear is not synchronised and must be engaged while stopped.

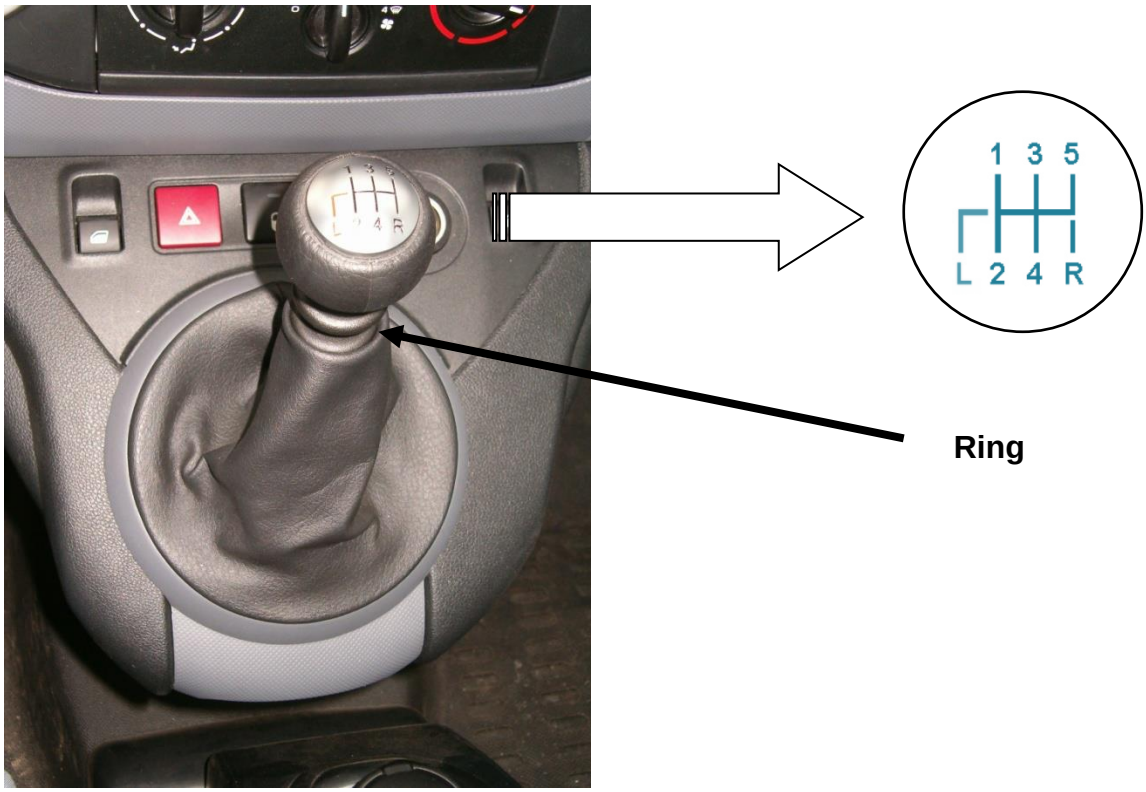

The lower speed (**L**) is located next to the 2nd gear. In order to engage it, unlock the safety by lifting the ring. It can only be used in 4-wheel drive mode.

Note:

- The use of the first low gear leads **to the start of the fan** and raises the **temperature gauge to maximum**.
- Do not use this gear in 2-wheel drive mode (eco). A continuous alarm will sound in this configuration.

NOTE:

For your safety and to ensure that your vehicle gives you lasting service, do not over use its crossing capabilities, it is not an off road vehicle

Frequently asked questions?

- **Rear drive engagement 4WD/ 2WD**

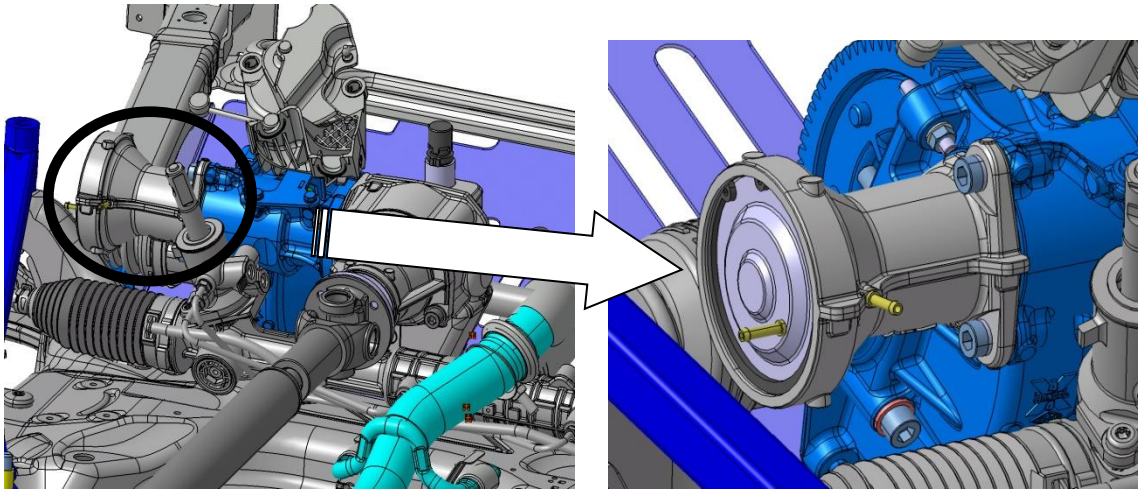

Mechanical assembly allowing switching between 2WD and 4WD using the nob on the dashboard.

4-wheel drive switch in 2WD position

4-wheel drive switch on (with rear locking on as indicated by LEDs)

- **Front transfer box**

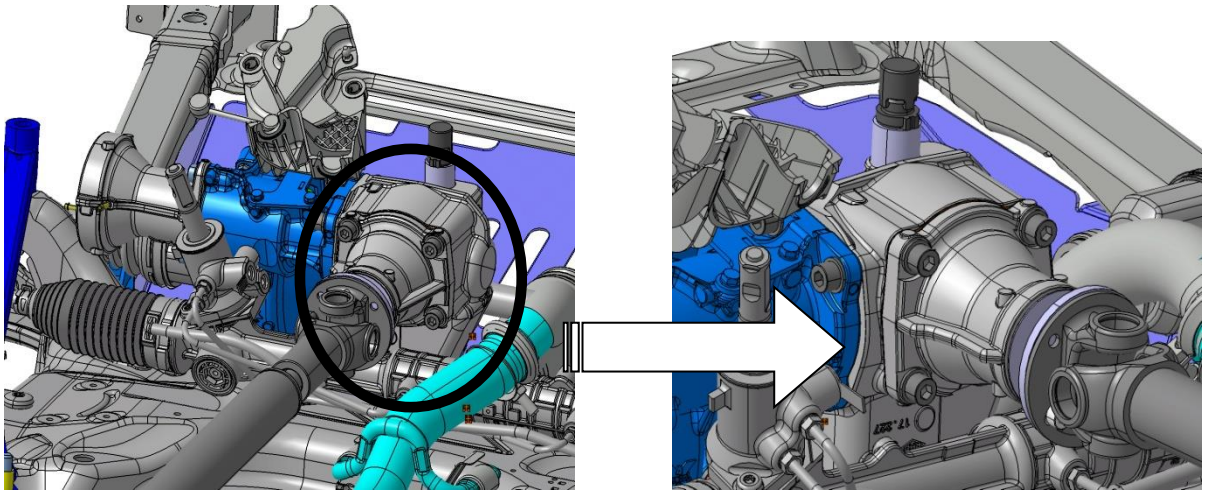

Mechanical assembly that transmits the engine torque to the longitudinal transmission through an angle transmission.

- **The longitudinal transmission**

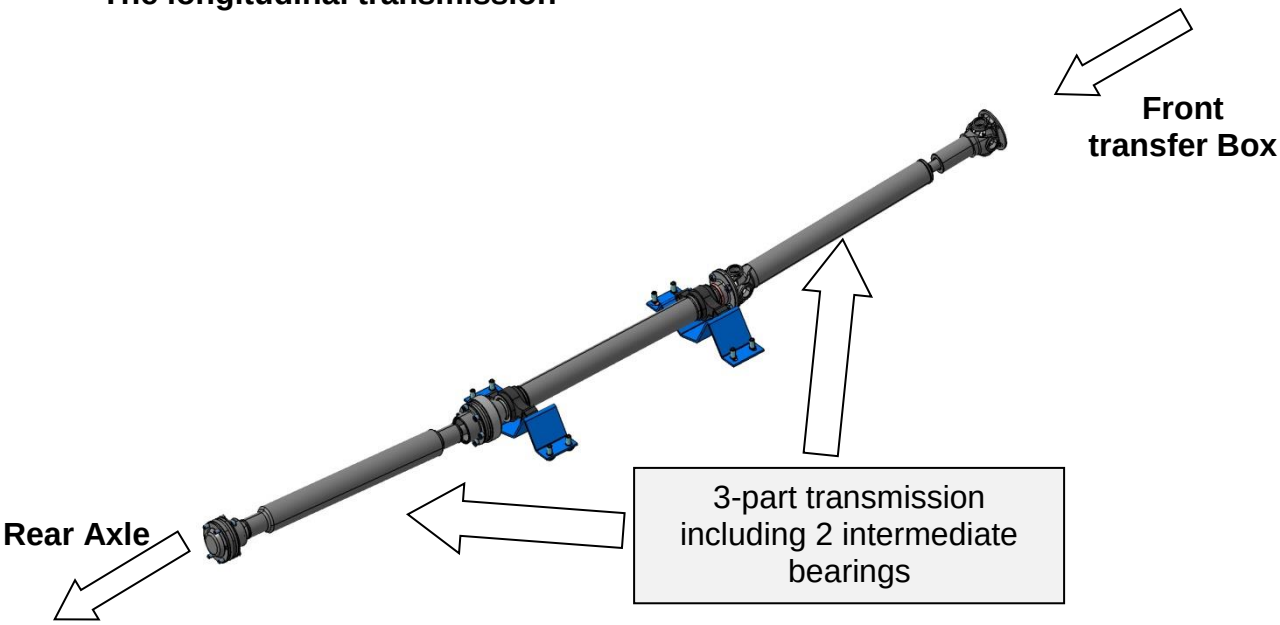

Mechanical element that transmits the engine torque to the rear wheels through a visco-coupler.

- **The hydraulic coupler (or visco-coupler)**

Active in 4-wheel-drive mode, it detects the loss of traction at the front wheels and then transmits the engine torque to the rear wheels.
The coupler will adjust the torque percentage as required.

- **The rear axle with differential**

The differential, a mechanical assembly mounted in the rear axle, enables the two wheels of an axle to turn at different speeds (absolutely essential for turning to prevent slipping the tyres). It also multiplies the torque.

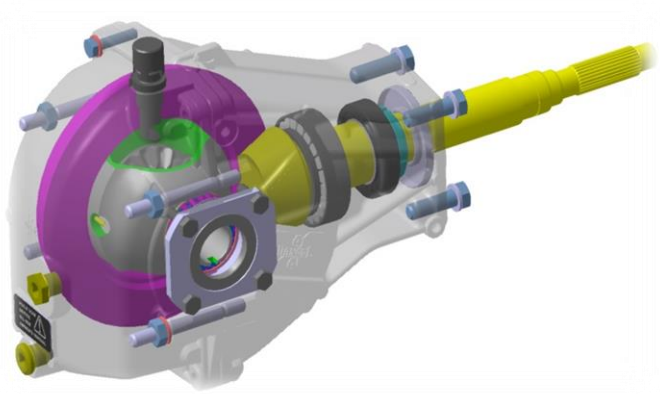

- **Lateral transmissions (or universal joints)**

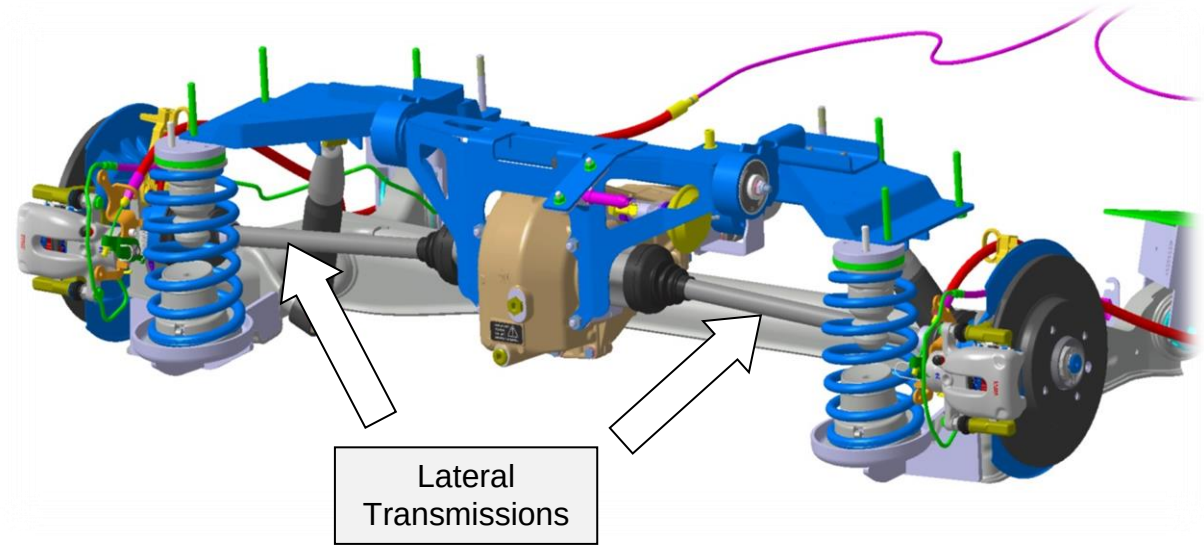

They transmit the engine torque from the differential to the wheels.

GUARANTEE:

Requirements for the Automobiles DANGEL guarantee:

The guarantee will apply provided the first technical oil change has been made between 1500 and 2500 km. This check is free except for lubricant when needed.

The guarantee certificate **(page 30)** must be returned to us duly completed by the garage, along with a labour invoice for 0.70h corresponding to the check of the 4-wheel-drive components.

The guarantee visit and periodic maintenance as defined in this maintenance log must be done by a member of the repair network of the vehicle's make authorised for this job.
His stamp on the stub of this log will be the only accepted proof.

The Automobiles DANGEL 4x4 equipment must be used for the purpose and loads for which it has been manufactured.

Damages to the Automobiles DANGEL equipment must not be on account of poor maintenance, over-use or wrong usage of the vehicle.

WARNING

The 1st TECHNICAL OIL CHANGE must be made between 1500 and 2500 km

Automobiles DANGEL Guarantee:

The Automobiles DANGEL contractual guarantee is added to the manufacturer's legal guarantee in the country where it is defined: this manufacturer's contractual guarantee remains unchanged and is fully applicable to the components of the base vehicle. In addition, the Automobiles DANGEL guarantee is applicable only to the components of the equipment that have been transformed or modified par Automobiles DANGEL

Transformations or modifications made by a vehicle modifier or constructor other than Automobiles DANGEL must not change the technical characteristics of the vehicle as it is when it is first delivered (in compliance with these instructions) and must not change its usage as it has been defined.
Automobiles DANGEL reserves the right to invalidate the guarantee of a vehicle that has been transformed or modified by another constructor if these modifications do not comply with the conditions given above.

The guarantee is applicable from the 1st day the vehicle is effectively put in use. The parts specific to the Automobiles DANGEL equipment and the corresponding labour are guaranteed for 2 years, subject to compliance with the usage recommendations specified in this manual and with the maintenance schedule.

MAINTENANCE:

Contact a repairer certified by the manufacturer while informing him that the vehicle is equipped with a DANGEL 4-wheel drive system (hand this manual to him if required), and refer to the detailed recommendations on the following pages.

In case of extreme uses (heavy loads, all-road driving, highway etc.) the mechanical elements of your vehicle are more stressed and need more frequent maintenance.

Who should I contact?

Maintenance and repairs are done in the after sales network of your vehicle's make.

MAINTENANCE AREA:

To be done at every maintenance check, in addition to the check-list of the base vehicle:

OPERATIONS	UNITS	LUBRICANTS
Draining	-Front transfer box -Rear axle	Oil 80 w 90 API GL5 -Yacco Bvx Ls 200 **Compatible oils: 80W90 according to standard API GL5 ZF TE-ML05C**
Inspection	-Check the state of the rear transmission sheaths -Check for potential leaks at the transfer box and at the rear axle case	
	-Sliding or longitudinal transmission	-Lubrication at each maintenance check or once-a year. (see « Mandatory maintenance operations » longitudinal transmission, next page)

Note:
To maintain the top performance of your vehicle, ***it is important to use the recommended quality of oil.***

Mandatory maintenance operations

Front Transfer Box

1st oil change: 1500 to 2500 km
Capacity: 0.65 L
Oil: 80 W 90 API GL5 (YACCO BVX LS 200), equivalence **80W90 according to standard API GL5 ZF TE-ML05C**
Oil change: Every 20.000 km or 2 years in case of normal use, every 15.000 km or 1 year in case of intensive/ severe use.

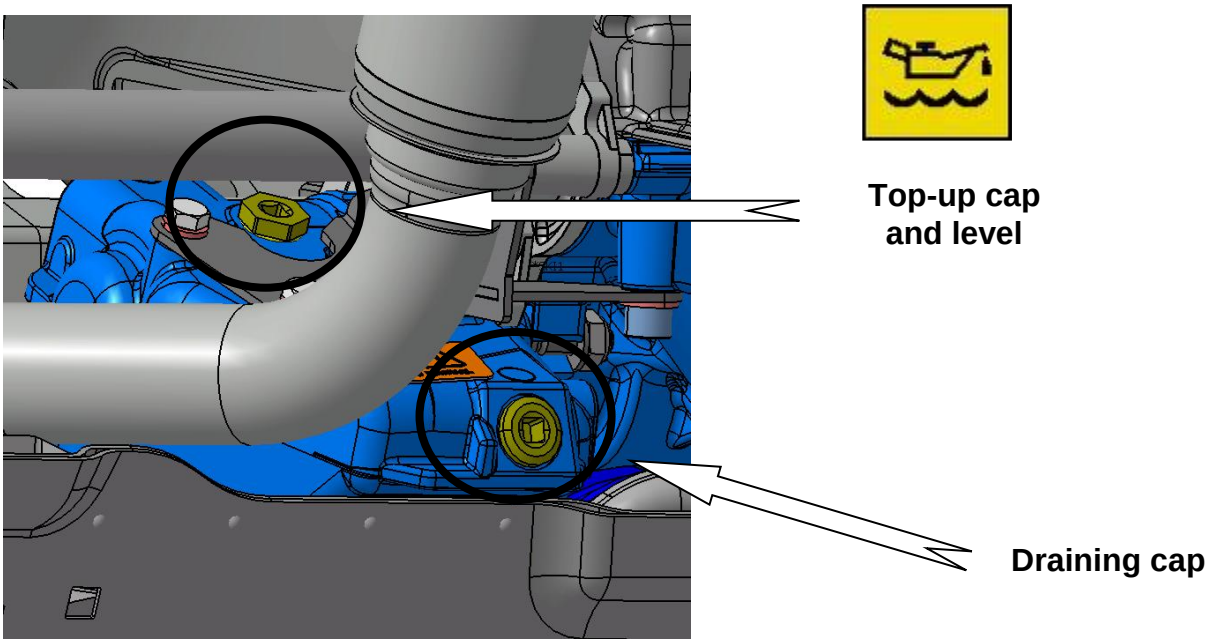

Note: The filling can also be done through the breather, in this case, open the filler cap to control the level.

Longitudinal transmission

Lubricate the crosspieces* during the 4-wheel-drive maintenance or once a year.
*: crosspieces presence depends on transmission models.

Rear axle differential

1st oil change: 1500 to 2500 km
Capacity: 1.1 L
Oil: 80 W 90 API GL5 (YACCO BVX LS 200), equivalence **80W90 according to standard API GL5 ZF TE-ML05C**
Oil change: Every 20.000 km or 2 years in case of normal use, every 15.000 km or 1 year in case of intensive/ severe use.

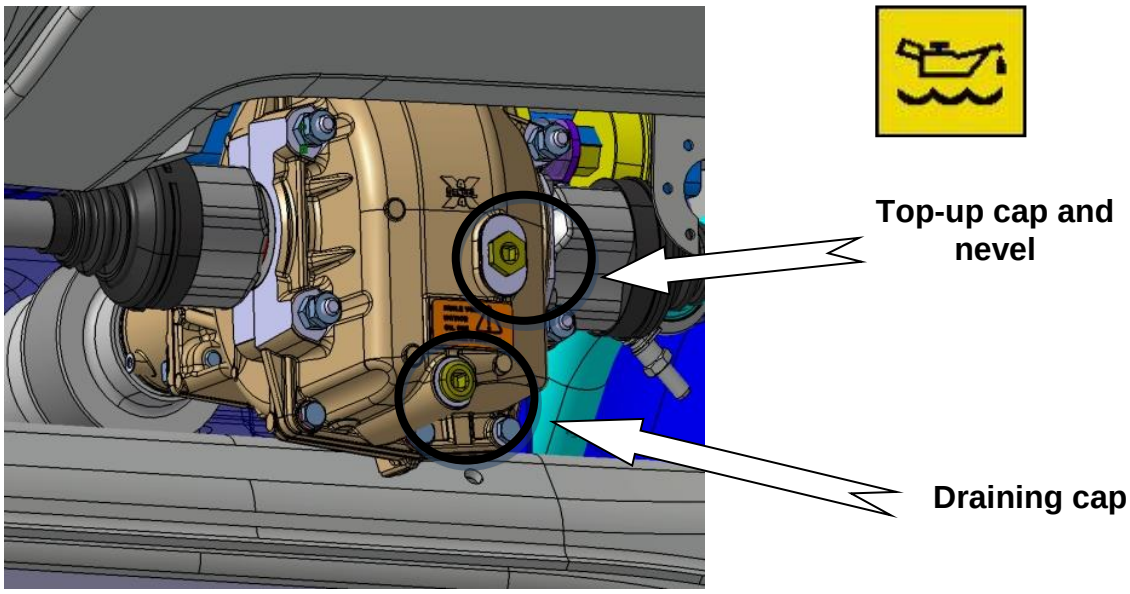

Gearbox

- Standard gearbox: same as basic vehicle.
- Gearbox equipped with a first low gear :
- Oil capacity 1.9L.
- Same oil as basic vehicle.
- Oil change every 60000 km.

Hydraulic coupler (or visco-coupler)

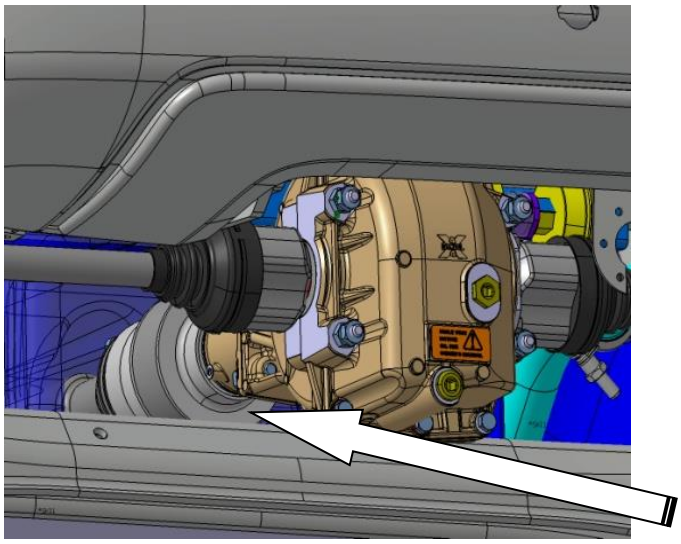

This unit does not need maintenance

Hydraulic coupler

Diesel fuel cooler

Check that there is no clogging: clean when required

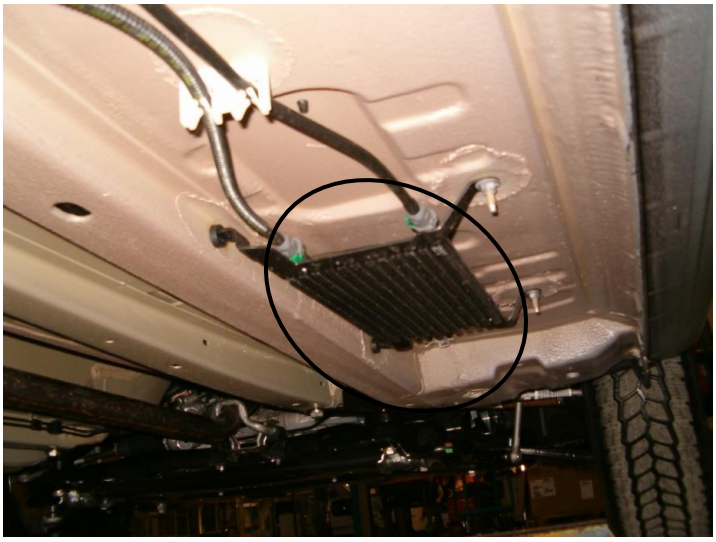

WARNING

This **information** is given **for reference only**.
We would like to remind you that **any intervention** must **be done** by a **certified repairer** of your vehicle's manufacturer.
Non compliance with the maintenance recommendations shall void **the Automobiles DANGEL guarantee**.

1st GUARANTEE CHECK IS MANDATORY TO VALIDATE THE DANGEL GUARANTEE

Guarantee certificate

Date : ……. Km : ……

CHASSIS No. or VIN: .....

Date of 1st on-road: .....

<u>Stamp of the Certified Repairer:</u>

A copy of this page must be completed by the certified repairer of your vehicle's manufacturer and sent to Automobiles DANGEL after the first maintenance check of the vehicle.

SERVICED AT _____ KM DATE: _____ / _____ / _____ Km : Next visit on _____ or _____ km	CERTIFIED REPAIRER'S STAMP
SERVICED AT _____ KM DATE: _____ / _____ / _____ Next visit on _____ or _____ km	CERTIFIED REPAIRER'S STAMP
SERVICED AT _____ KM DATE: _____ / _____ / _____ Next visit on _____ or _____ km	CERTIFIED REPAIRER'S STAMP

USE THE RECOMMENDED QUALITY OF OIL

SERVICED AT _____ **KM** DATE: _____ / _____ / _____ Km : Next visit on _____ or _____ km	CERTIFIED REPAIRER'S STAMP
SERVICED AT _____ **KM** DATE: _____ / _____ / _____ Next visit on _____ or _____ km	CERTIFIED REPAIRER'S STAMP
SERVICED AT _____ **KM** DATE: _____ / _____ / _____ Next visit on _____ or _____ km	CERTIFIED REPAIRER'S STAMP

USE THE RECOMMENDED QUALITY OF OIL

SERVICED AT _____ **KM** DATE: _____ / _____ / _____ Km : Next visit on _____ or _____ km	CERTIFIED REPAIRER'S STAMP
SERVICED AT _____ **KM** DATE: _____ / _____ / _____ Next visit on _____ or _____ km	CERTIFIED REPAIRER'S STAMP
SERVICED AT _____ **KM** DATE: _____ / _____ / _____ Next visit on _____ or _____ km	CERTIFIED REPAIRER'S STAMP

USE THE RECOMMENDED QUALITY OF OIL

SERVICED AT _____ **KM** DATE: _____ / _____ / _____ Km : Next visit on _____ or _____ km	CERTIFIED REPAIRER'S STAMP
SERVICED AT _____ **KM** DATE: _____ / _____ / _____ Next visit on _____ or _____ km	CERTIFIED REPAIRER'S STAMP
SERVICED AT _____ **KM** DATE: _____ / _____ / _____ Next visit on _____ or _____ km	CERTIFIED REPAIRER'S STAMP

USE THE RECOMMENDED QUALITY OF OIL

Note

AUTOMOBILES DANGEL S.A.
5, RUE DU CANAL - F 68780 SENTHEIM
TÉL. : +33 (0)3 89 38 57 00
FAX : +33 (0)3 89 82 59 13
INTERNET : www.dangel.com

Copying or translation even partial forbidden without the prior written consent of S.A. Automobiles DANGEL.

The manufacturer reserves the right to modify his production, without having to update the present notice.